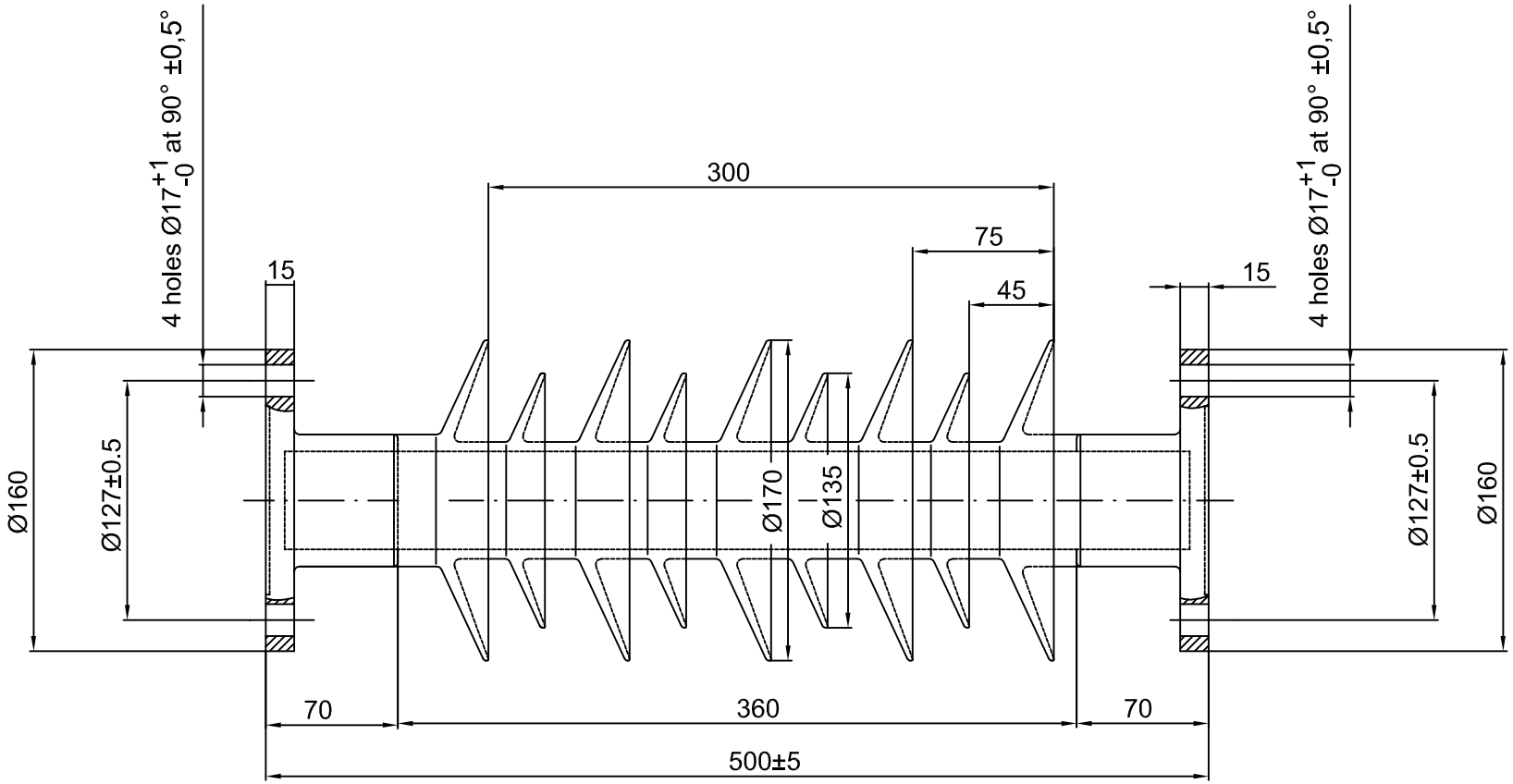

TECHNICAL DATA

-Insulation level Um (IEC 71-1).....52 kV
Creepage distance ..... 1120 mm
- Dry arcing distance..... 420 mm
Compresion breaking load.....120 kN
- Specified tensile load ..... 100 kN
- Specified cantilever load ..... 15 kN
Maximumdesign cantilever load (MDCL).....8 kN
- Dry lighting impulse withstand voltage (1,2/50 µs).... 250 kV
- Wet power-frequency withstand 50 Hz(1 min.)..... 110 kV

ELECTRICAL AND MECHANICAL TESTS ACCORDING TO IEC 61952

Drawn	ing. N. Ghilinta	Data 12.04.2018	EPS. 2124 - 0
Checked	sing. V. Pomparau		
Approved	ing. Chifan C.		
		Weight: kg	POST INSULATOR ICS 500-1100